SERVICE INSTRUCTIONS

for fuel-burning heater type

STROCO 35.02 M-LE-J

Applicable from heater no.

Diesel: 44969
RME: 31032

STROCO ApS, Viborgvej 50, DK-8450 Hammel, ph. +45 86961066, fax +45 86969647

Technical approval no. SP 555 AD 05

EU directive 42/245:
EU technical approval no. E5 10R-03153
Heating directive E 2001/56:
EU technical approval no. R122 E5 00002
ISO certified
Developed with aid from the Danish Environmental Protection Agency

GB 09/17

This manual is also available at www.stroco.dk

The minimum conditions below must be met in order to maintain the right to claims under the warranty.

1. **Installation must be carried out as described in this manual.**

2. **Service and maintenance must be performed in a proper professional manner. Maintenance/service must be performed within the established schedule.**

3. **Only original spare parts may be used.**

4. **The heater may only be used for the type of fuel stated on the model plate.**

5. **The heater may only be used with the voltage stated on the model plate.**

The heater must not be used in service stations.

The heater must not be used where there is risk of ignition of flammable vapours and/or materials. Nor where there is risk of accumulation of toxic gasses, e.g. in closed spaces.

The heater must not be used if the heater or its exhaust opening is near flammable materials, e.g. dry grass.

PAGE:

Description …… 6-7
Schematic diagram of fuel-burning heater ..…..…… 7
Built-in dimensions ..…… 8
Installation guide/Installation plan …...…… 9-10
List of connections …...…….. 11
Electrical connections ...…… 12-13
Technical specifications ……... 14-15
Explanation of terminology ……. 15
Maintenance …….. 16-18
Description of functionality - operation …….. 19
Description of functionality …….. 20
Troubleshooting - how? …… 21
Disconnection of combustion chamber ……... 22
Process control diagram ……... 23
Alarm functionality ……... 24
Combustion unit …… 25
Voltage check on electrodes ……. 26
Photoelectric sensor …….. 27
Under-/overvoltage …… 28
Replacement of fan motor …… 29
Fuel preheater ……... 30
Fuel pump …….. 30
Inspection of fuel pump solenoid valve ……... 30
Control thermostat sensor …… 31
Assembly drawing - part list …… 32-35
Electrical diagram ……36-39
STROCO 35.02 M EL ……. 40-44
Warranty conditions ……. 45
Dealers …… 46

DESCRIPTION

It is important to read and understand this manual before using the STROCO heater to ensure optimum utility and safety. Please mail the warranty card to STROCO ApS.

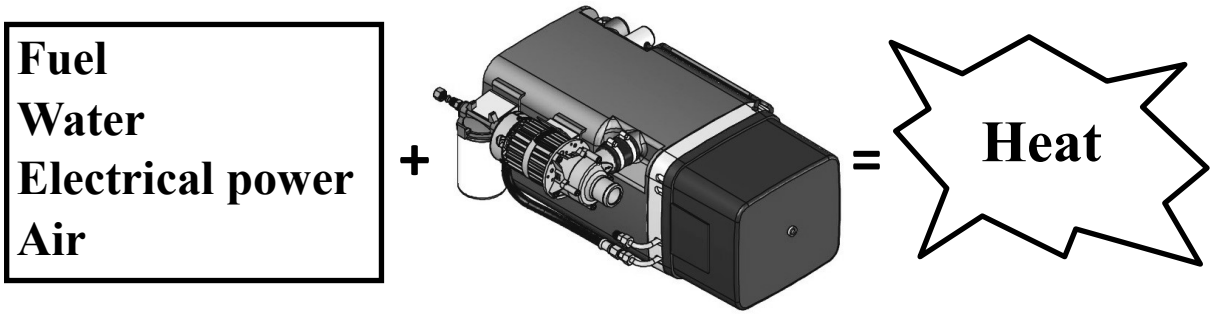

The presence of the above-mentioned basic elements, in the right quantities and correct mixtures, is essential to the heat production of the STROCO heater.
In case of failure or unsatisfactory operation, make sure to check these basic elements first.
The STROCO heater is independent of the operation of the vehicle's engine, and vice versa. This means that interruptions in one system do not affect the operation of the other. However, lack of electrical power or fuel will affect both systems, if both engine and heater are connected to the same battery and fuel tank.
The fuel-burning heater's job is to heat the water in the heating system. It does this by burning fuel at a high temperature in the combustion chamber. This heat is transferred to the water in the boiler section of the heater, and the water is pumped into the heat exchanger units in a continual process, where the hot water acts as a transfer agent between heat production (the heater) and heat exchangers.
The heart of the heater is the combustion section. Fuel is pumped to here and vaporized by a nozzle. This fuel vapour ignites, establishing a flame (combustion). One of the factors that ensure correct combustion of the fuel vapour is regulation of air intake. The combustion process and other functionality of the heater is controlled by the brain of the system: the electronic control and monitoring unit. This automatic system ensures that the process follows predetermined routines. If the process should deviate from these routines, or if the combustion process fails or becomes deficient due to poor supply of the basic elements - fuel, water, and air - the system shuts down the process. In theory, the presence of the basic elements alone should ensure the combustion process, but since we require the process to be highly efficient and reliable, it must run in a controlled manner. This manual will help you to keep the heater running satisfactorily at all times. What to do if the heater is not working, or performs inadequately?
The section *Alarm Functionality* can help you to locate the source of an error and analyse the symptoms.
The section *Error Remedy Instructions* in the Description of Functionality explains and illustrates remedial actions.

Precautionary measures are always better than repairs, and there are a number of *Maintenance Procedures* that should be undertaken regularly to ensure the continued working order of the heater. Please consult the maintenance section. Section 1 in the manual deals with the installation of the heater, i.e. the actual fitting. The other sections deal with servicing and maintenance exclusively.

Schematic diagram of fuel-burning heater

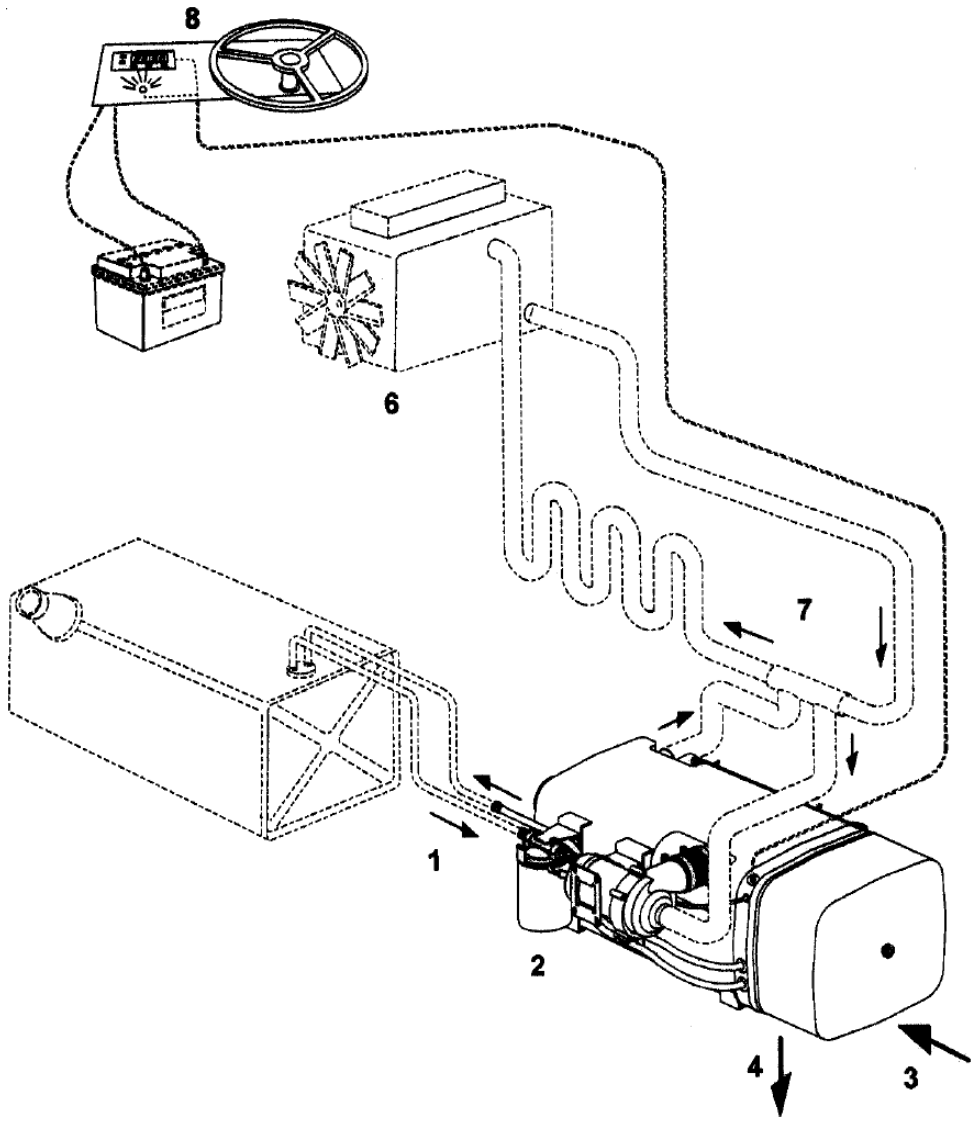

1:Fuel, 2:Filter, 3:Air, 4:Exhaust, 6:Engine, 7:Heating system, 8:Control panel

BUILT-IN DIMENSIONS

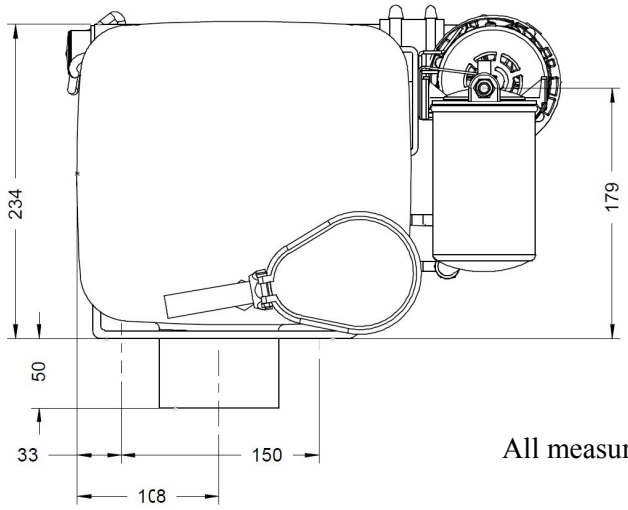

All measurements +/- 2 mm

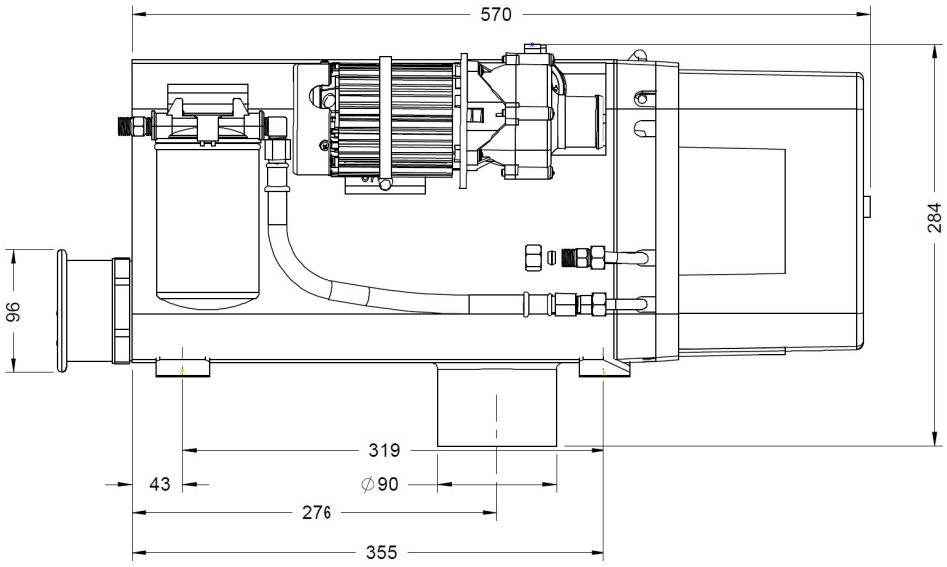

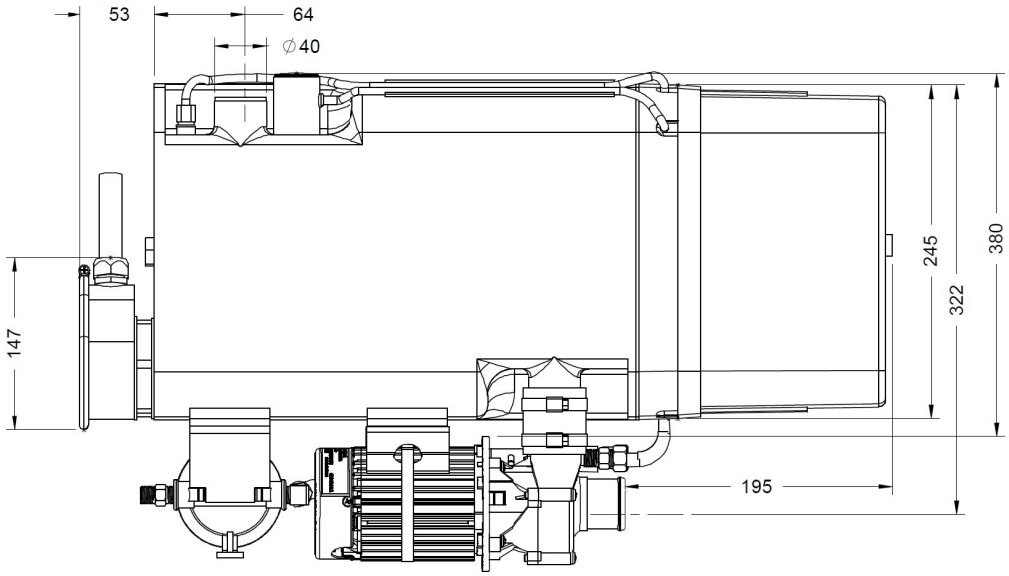

In general: Installation must be performed in accordance with the ECE 2001/56 standard

This guide applies to STROCO fuel-burning heater type 35.02 M-LE-J.

- **Material and design of fuel hoses/pipes: TA max. -40°C/+120°C.**
  In case of replacement of hoses, use ONLY hoses from STROCO ApS, or hoses approved by STROCO ApS. The heater's warranty will be void if any other hoses are used. Leaky hoses and joints lead to increased risk of fire.
- **Fuel hoses located on the outside of the vehicle must be shielded against damage. Electrical cables must not be run next to fuel hoses.**
- **Uninsulated exhaust pipes/hoses must be located at least 7.5 cm from flammable materials.**
- **The fuel-burning heater should be mounted where it is protected from water and spatter from the vehicle's wheels, and from impact or other damaging effects. It is very important to clean the surrounding area thoroughly when servicing the unit, and to check all electrical connections and plugs, greasing with acid-free grease. The area should be kept free of damp. Covers, casings etc., must not be removed.**
- **The heater must be positioned in an way that does not impede maintenance work on the heater and the vehicle's other components. If necessary, the heater must be placed in a separate box.**
- **Installation must be performed in such a way that heat impact from the vehicle's engine and exhaust system does not damage the heater. Conversely, the vehicle's components must be protected against damage from the heater's exhaust.**
- **The water system which the heater will be connected to must be fitted with a pressure control valve for safety.**
- **The heater should be installed in as low a position as possible relative to the vehicle's cooling/ heating system.**
- **If the heater is installed inside a casing, this must have an air intake opening of at least 100 cm². (The air intake must not be blocked off). The casing must be made from a non-flammable material.**
- **Intake air for the heater must not come from rooms where there are people. The placement of the intake must be such that exhaust gas from the vehicle does not mix with the intake air.**
- **The air intake must be placed and designed to avoid clogging by snow or dirt. The air intake must be placed to keep the airflow around the vehicle from interfering with the pressure in the system.**
- **The opening of the exhaust pipe must be placed so that:**
  1) Combustion is not notably affected by airflow around the vehicle.
  2) There is no heat damage to adjacent vehicle components.
  3) There is no risk of igniting dry grass etc.
- **The exhaust pipe must be designed to work with local exhaust ventilation, although not directly connected, as this can affect combustion.**
- **The vehicle must have safety measures to ensure that no exhaust ends up in rooms where there are people.**

- **The exhaust pipe should be max. 4000 mm in length and should be 90 mm in diameter.**
- **If the heater is installed in a cargo area, that section of the fuel line must be made of steel. Connections to the vehicle's fuel supply must be made outside this area.**
- **The heater may not be installed in a driver's or passengers' compartment.**
- **The exhaust pipe should be made from a material that resists heat and corrosion (AISI304 SS 2333 alloy steel resistant to max. 800°C with at least 0.75 mm wall thickness).**
- **Connections to the exhaust system must be tight and secured with brackets.**
- **If the heater is installed in a cargo area, the exhaust must be made from an unbroken steel pipe.**
- **After installation, the model plate must be accessible and readable.**
- **THE EXHAUST MUST BE ROUTED OUTSIDE OF THE VEHICLE IN HOSE OR PIPE.**

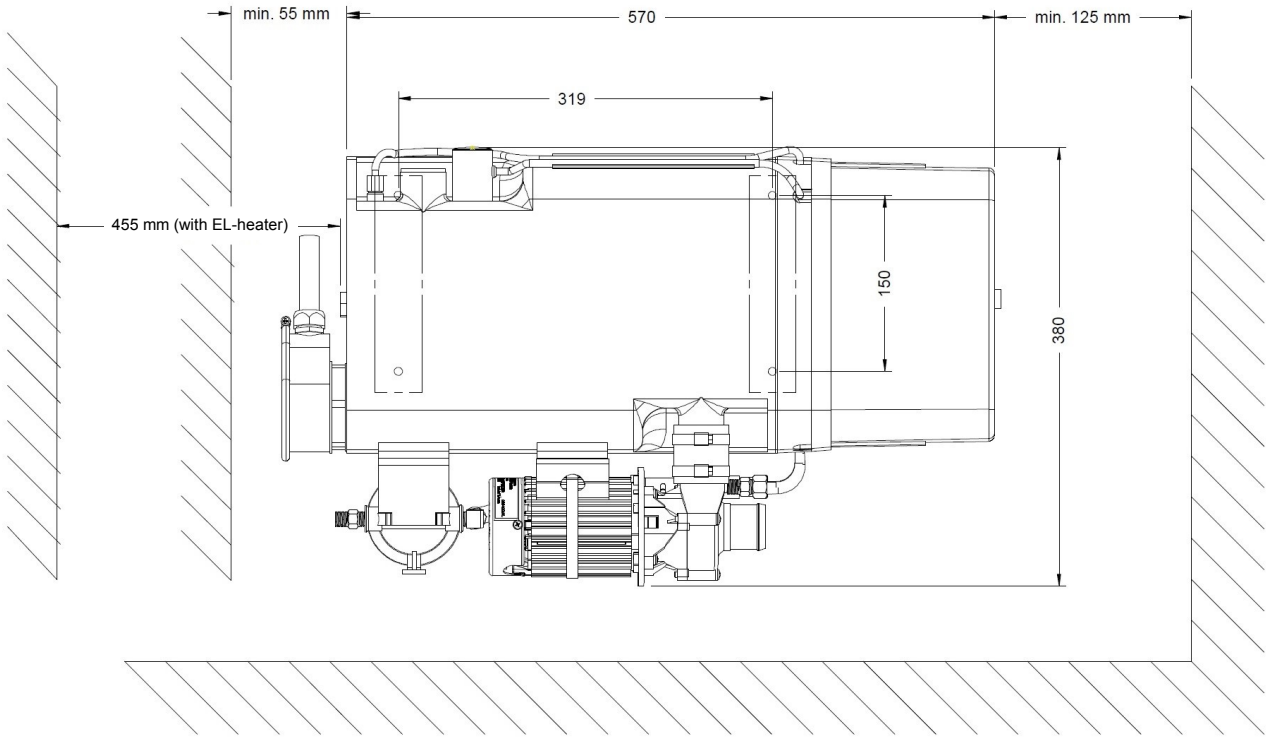

There should be adequate room at the combustion end of the heater to remove the combustion unit and combustion pipe. Minimum distances are shown in the illustration. We recommend mounting the heater unit on vibration dampers. In this case, the heater connections should be made with flexible hose.

Water/fuel connection

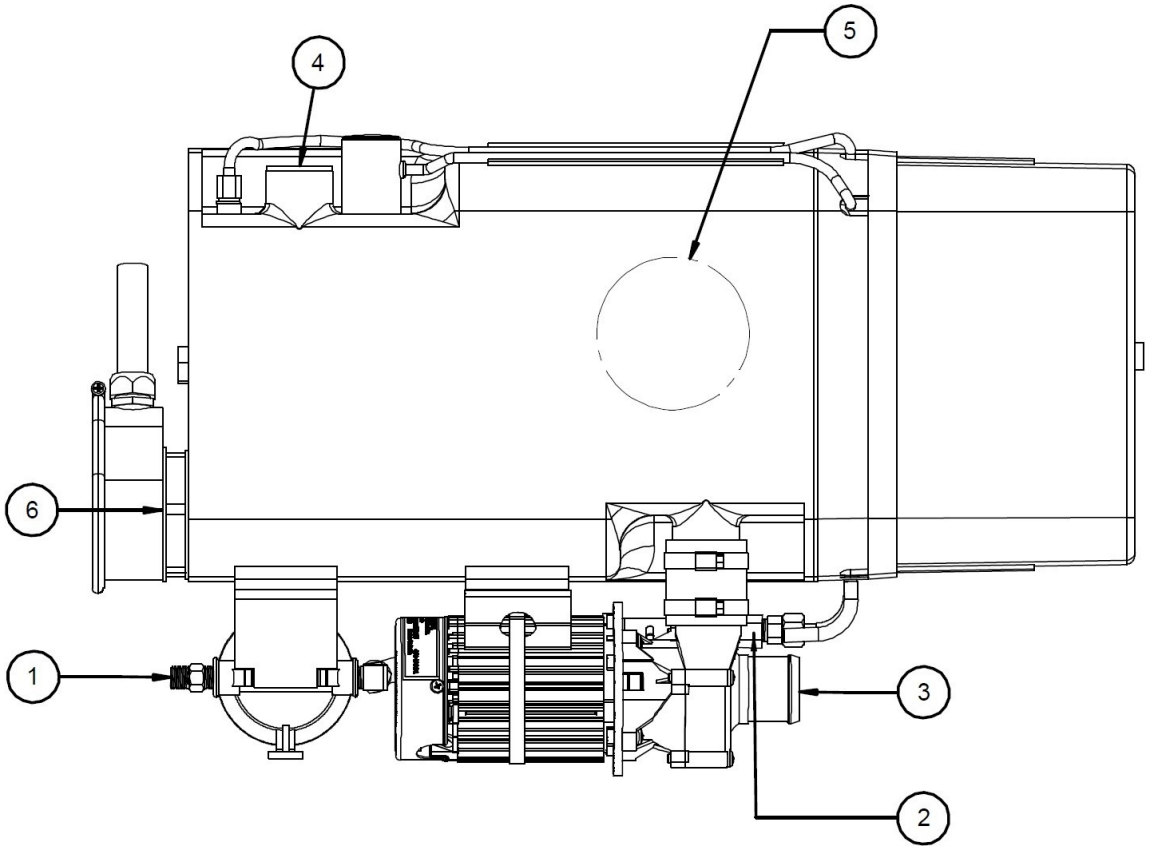

Pos 1: **Intake fuel flow (to heater fuel pump from vehicle fuel tank):**
Connection of fuel hose with 1/4 x 1/4 fitting (standard design).

Pos 2: **Outlet fuel return (to fuel tank):**
Fuel hose with 1/4 x 1/4 fitting (standard design).

Pos 3: **Intake return water: Branch for connection of 38 mm frost resisting hose.**

Pos 4: **Outlet supply water: Branch for connection of 38 mm frost resisting hose.**

Pos 5: **Exhaust: Outer diameter Ø90 mm.**

Pos 6: **Connection of electrical immersion heater (optional):**

ELECTRICAL CONNECTIONS

The fuel-burning heater is available in two versions: 12V or 24V. External connections are collected in a 7 pin plug labelled B and 4 pin plug labelled R. The heater's internal connections are illustrated in the diagram on page 36. Always use correct cable dimensions according to applicable standard... The dimensions mentioned are minimum requirements.

Pin B1: **Free.**

Pin B2: **Connect to main switch or timer. The other side of the switch should be connected via 10A fuse to + (positive).**

Pin B3: **Connect via 10A fuse if separate operation of the circulation pump is desired.**

Pin B4: **Signal for field coil open (+) max. load 1A.**

Pin B5: **Connect to diagnostics lamp. The other side of the diagnostics lamp should be**
(positive) **connected to + switch. Diagnostics lamp should be an LED. For safety reasons, make sure that the diagnostics lamp is placed within the driver's field of vision so that potential errors can be detected quickly and the heater can be checked.**

Pin B6: **Connect to - (negative) if low temperature is desired.**

Pin B7: **Connect to relay for room fan.**

Pin R1: **Connected via 15A fuse to + (positive). If the fuel used is RME, the fuse must be 20A.**

Pin R2: **Connected via 10A fuse to + (positive). Please note: Join together the + cables from the two fuses and route to the vehicle's battery in a 4 mm² cable.**

Pin R3 **Free.**

Pin R4: **Connect to chassis earth (negative). Use at least the same cable thickness as B3 and B4.**

***PLEASE NOTE*: The heater can be set to adjust the temperature within two ranges (see p. 14-15: High/low temperature). Select the low range by connecting cable B6 to chassis point M. Select the *NORMAL* range by *NOT* connecting *B6*.**

Plug B **Plug R**

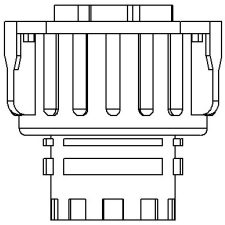

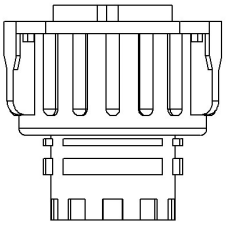

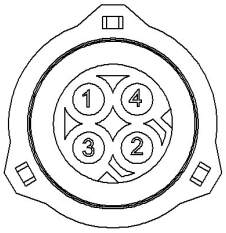

Front

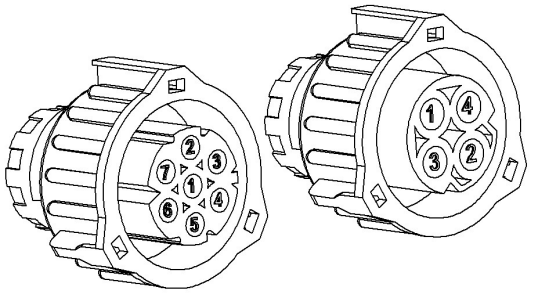

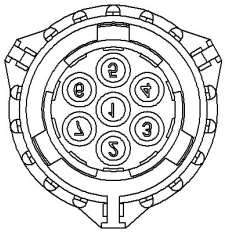

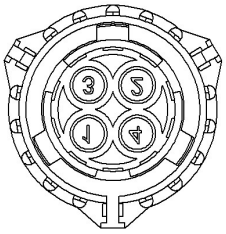

Back

TECHNICAL SPECIFICATIONS

Technical data:

STROCO fuel-burning heater type 35.02 M-LE-J:	**Fuel-burning heater with integrated control system and safety and alarm functionality.**
Dimensions L x W x H:	**570 x 245 x 234 mm**
Weight:	**30 kg total. (plus any optional parts).**
Connections:	**The fuel-burning heater connects to the vehicle's electrical installation, fuel tank and water/heating system.**
Supply voltage:	**24 or 12V DC**
Fuel:	**Diesel EN 590 - RME EN 14214**
Fuel filter:	**Filter area: 1937 cm² Degree of filtration: 0.02 mm Connection: 1/4"RG**
Heating output:	**Diesel 23/30kW - RME 30kW**
Power consumption:	**11A at 24V DC diesel. 14A at RME 22A at 12V DC diesel 3A Pre-heater element diesel. 6A at RME 2.5A at 24V DC filter pre-heater - optional**
Combustion data:	**CO_2: Diesel 30kW 10% - RME 30kW 10% Sooting level: 0-1 Bacharach Stated values +/-1%**
Circulation pump:	**6000 l/h at 0,4 bar Power consumption: 6.6A at 24V DC**
Fuel pump:	**Working pressure: RME 11.6 bar - Diesel 30kW 9.6 bar - Diesel 23kW 11.6 bar**
Nozzle:	**Please see spare part list.**
Photo unit:	**Type LDR**
Overtemperature control:	**Type Therm-o-dise Disconnect temperature 110°C**
Control thermostat:	**NTC 10 K sensor. Boiler temperature: High: stop/disconnect approx. 73/80°C Low: stop/disconnect approx. 50/70°C Cabin fan: Start approx. 50°C/Stop approx. 45°C.**
MAX. AMBIENT TEMPERATURE:	**80°C**

IMPORTANT! THE HEATER SYSTEM MUST BE FILLED WITH AN ANTI-CORROSIVE ADDITIVE (E.G. 40-60% ANTI-FREEZE) (SEE ENGINE SPECIFICATIONS).

Pre-ventilation:	**For cold start approx. 60 sec.** **For restarting approx. 10 sec.**
Post-ventilation:	**Approx. 120 sec.**
Undervoltage:	**In 24V units:** **Disconnect/connect approx. 20.5/22V DC** **In 12V units:** **Disconnect/connect approx. 10.5/11.5V DC**
Overvoltage:	**In 24V units:** **Disconnect/connect approx. 30/29.5V DC** **In 12V units:** **Disconnect/connect approx. 15/14.5V DC**
safety period:	**Max. 15 sec.**
Switch load:	**Max. 10A (cabin fan pin B7)**
Electrical connection:	**15 pin AMP plug (A in electrical diagram)**

Explanation of terminology

Low temperature boiler supply water

At low supply water temperatures, the control thermostat cuts out at approx. 70°C and cuts in at approx. 50°C. This is referred to as the low range in this text.
Please note: Connect cable B6 if the low temperature range is desired.

High temperature boiler supply water

At high supply water temperatures, the control thermostat cuts out at approx. 80°C and cuts in at approx. 73°C. This is referred to as the high range in this text. This is the temperature range most commonly used.
Please note: Do not connect cable B6 if the high temperature range is desired.

Overheating protection (max. temperature)

Excessive heating of the boiler water is prevented by means of a circuit breaker in the overtemperature thermostat, which is activated at approx. 110°C. If the circuit is tripped, disconnecting the electrical system, it must be reactivated manually by pressing the black button on the thermostat. The system does not restart automatically, even if the water has cooled down again.

Safety period in case of flame failure

If no flame is established, the safety relay switches on the ignition to attempt a restart. If there is still no flame within the relay's safety period of 15 seconds, the relay cuts out and the systems starts to post-ventilate. If the safety relay cuts out, the error lamp comes on.

Pre-ventilation

The heater starts up with a pre-ventilation period of 60 seconds. This period is reduced to 10 seconds once the heater is in regular operation where start and stop is controlled by the thermostat.

MAINTENANCE

To ensure reliable operation of the fuel-burning heater, perform the following maintenance inspections at least once per year, at the end of the heating season, or well ahead of the start of the season.

General servicing:

- **Replacement of the fuel filter.**
- **Replacement of the nozzle.**
- **Inspection of motor carbon brushes.**
- **Inspection of pipes and hoses for any leaks. It is particularly important that the heater's fuel suction hose has absolutely no leaks. All fuel hoses should be replaced every 2 years. Use only hoses sourced from STROCO, or hoses approved by STROCO. The heater's warranty will be void if it is fitted with hoses not approved by STROCO, or if there is no documentation of replacement of fuel hoses with 2 year intervals.**
- **Inspection of the boiler and combustion pipe. Removal of any soot or incrustation from the boiler.**
- **Replacement of the combustion pipe if damaged.**
- **Inspection of the combustion unit. Replacement of the nozzle and subsequent check that the nozzle is centred in the turbolator. Electrodes, nozzle, and turbolator should be clean and undamaged. Checking of electrode setting as per page 26. Improper combustion can lead to boiler or combustion pipe being blackened by soot. Inspection of the photoelectric sensor for cracks; cleaning if necessary. Inspection of the coupling between fan wheel and fuel pump; replacement of the coupling if the contact surfaces are worn. When the combustion unit is fitted back on the boiler, adjust the fuel pressure to the correct value and then adjust the air setting to comply with relevant combustion data.**
- **Inspection of all cables and electrical connections for possible damage or corrosion.**
- **Outside the heating season, run the heater for at least 15 min. per week.**

IMPORTANT!

- **When using RME, the fuel pump must be replaced every 2 years.**
- **Fuel hoses must be replaced every 2 years regardless of fuel type. Fuel hoses must be replaced with original STROCO fuel hoses, or approved hoses that meet the same minimum specifications.**
- **It is important that hoses, seals etc. be inspected for leaks continually. Leaky fuel lines present a serious safety hazard. The warranty on the STROCO fuel-burning heater will be void in case of deficient or improper servicing.**

Inspection of pump suction

- **Is there fuel in the tank?**
- **Check vacuum, max. -0.4 bar, connect to port ”V” and check with vacuum gauge STROCO part no. 13.909.**
- **Are the fuel filter, intake line, or any taps clogged or closed?**
- **Is the fuel very cold and viscous?**

Inspection of pump pressure

- **Check fuel pressure; connect gauge to port ”P”.**
- **Adjust the pressure at port ”P1”; check with pressure gauge STROCO part no. 13.902.**
- **Unsteady gauge readings are a sign of air in the intake line.**
- **For fuel pressure, please consult the technical specifications.**

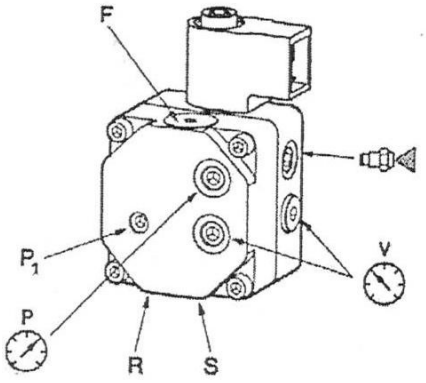

P_1	Pressure regulation
S	Intake line G 1/4
R	Return line G 1/4
	Nozzel attachment left G 1/8 (alternatively right)
P	Pressure gaugeattachment front G 1/8 (alternatively left)
V	Vacuum gauge attachment G 1/8
F	Cartridge filter

Fuel filter

The filter is located on the fuel intake line between the fuel pump and the fuel tank.

Install the filter so that the arrows correspond to the flow direction.

On replacement, inspect the filter and joints for any leaks.

Circulation pump

The circulation pump transports water around the heating system.
The pump runs constantly when the main switch/starting clock is activated and the heating unit is operational.
The pump is activated via the circulation pump relay. The relay receives a control current from the control system through plug A, pin 7.
When the relay is active, the pump receives its working power via the relay from main plug R, pin 2 (see page 36).
During operation, plug V, pin 1 should read out 24V (12V).

The heater can be started using the main switch on the dashboard. Alternatively, a stating clock can function as main switch.

The start-up process connects control current from the installation (12V or 24V battery).

The main power supply is connected directly to the heater's control system, which controls the power supply to the heater.

The pump relay is activated immediately on start-up to start the circulation pump. The pump runs constantly when the main switch is activated.

The control thermostat sends a signal to start up the combustion unit when the boiler temperature drops below the set value.

During the *pre-ventilation period*, the ignition electrodes (sparks) receive current, the fan motor runs, and the nozzle pre-heater is engaged.

The fuel pump solenoid valve is switched on approx. 60 seconds after system start-up to release fuel to be vaporised in the nozzle. *The safety timer* is engaged at the same time.

Once the flame is established, the nozzle pre-heater and ignition are disengaged. The starting sequence is now complete, and the combustion unit remains operational until the control thermostat cuts it off and the *ventilation period* begins.

When the control thermostat completes the circuit again, the starting sequence repeats with a *pre-ventilation period* of 10 seconds.

The control system's *monitoring* is focused primarily on the combustion process.

If the fuel does *not* ignite on start-up, the safety relay remains active. After approx. 10 seconds, the safety relay disconnects, and post-ventilation begins.

If the flame goes out during operation, the safety relay switches on the ignition to attempt a restart. If the fuel does not ignite, the safety relay disconnects, the fuel supply stops, and the alarm is activated. If the fuel does ignite successfully, the combustion process continues until the control thermostat cuts it off.

The electronic circuit is controlled automatically, so fuel supply stops in case of component failure in photoelectric or engine circuits. In case of abnormal operating conditions, such as flame failure during operation or false light during pre-ventilation, the automatic safety system stops the heater and activates *Alarm functions*. It is therefore important to install the LED lamp that displays this alarm from the system within the driver's field of vision so that potential errors can be detected quickly.

The control system has an integrated motor voltage regulator, which maintains a constant 21.5V on the fan motor.

The heater's *pre- and post-ventilation* and *low voltage logic* is also controlled by the automatic system.

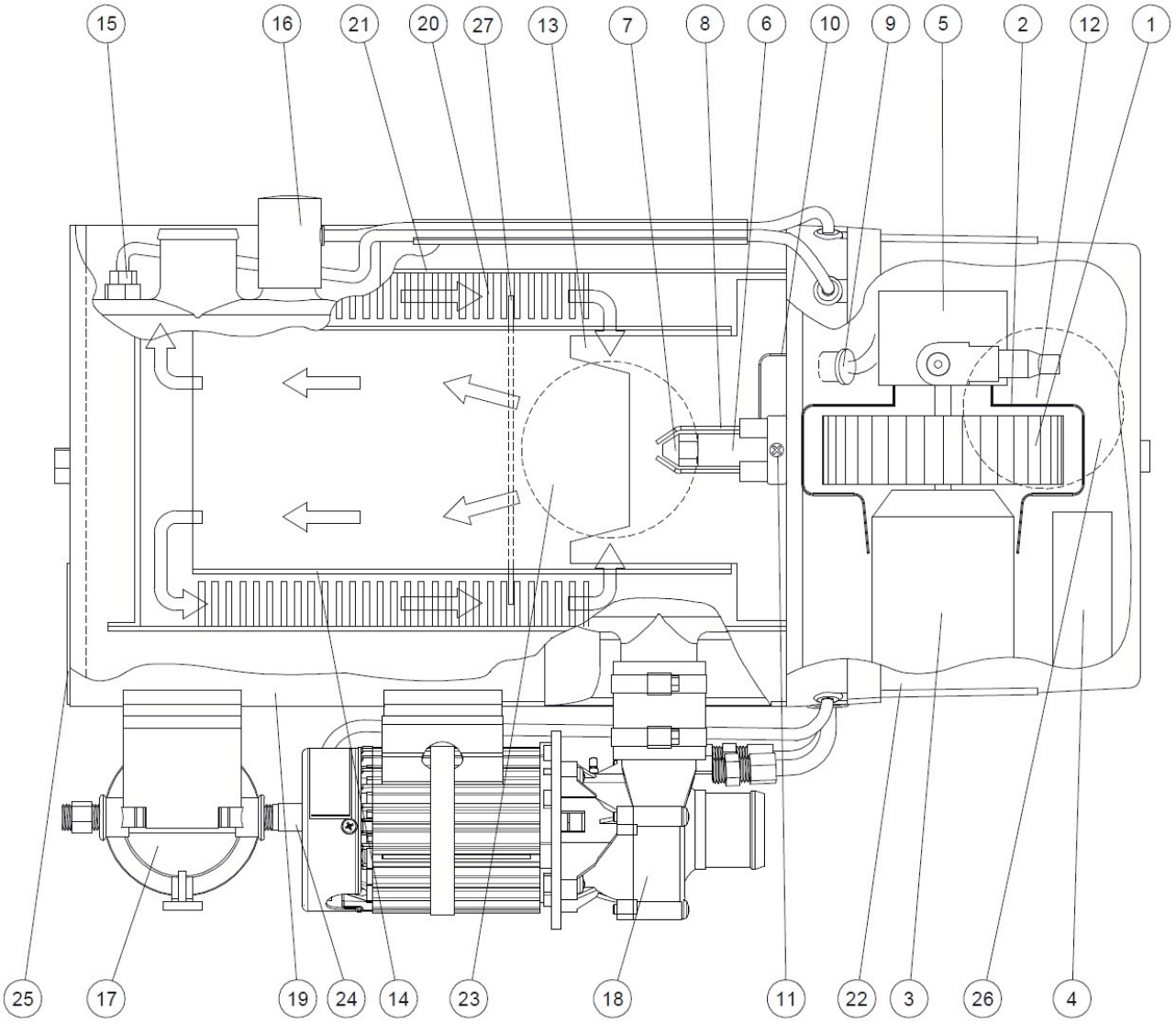

1 **Fan wheel**
2 **Fan housing**
3 **Motor**
4 **Control system**
5 **Fuel pump**
6 **Nozzle socket**
7 **Nozzle**
8 **Ignition electrode block**
9 **Photoelectric sensor**
10 **Fuel pipe**
11 **Lock bolt for ignition electrode block**
12 **Air plate**
13 **Combustion unit**
14 **Combustion pipe**
15 **Temperature sensor**
16 **Overtemperature control**
17 **Fuel filter**
18 **Circulation pump**
19 **Outer boiler**
20 **22 mm copper pins**
21 **Inner boiler**
22 **Plastic cover**
23 **Exhaust**
24 **Fuel hose**
25 **Connection for immersion heater**
26 **Air intake**
27 **Flue gas conduit**

If you initiate troubleshooting because the heater is not working correctly, be sure to note the state and condition of the unit before and after the fault, if possible, in order identify the problem prior to repairs.

- **Is the main switch or starting clock inactive?**
- **Is the operation/diagnostics lamp on?**
- **Does the operation/diagnostics lamp show an error in case of alarm functions?**
- **Have any irregularities with the heater been observed prior to the fault? Any unusual smells, sounds, of visible changes?**
- **Is there fuel in the tank?**
- **Is there water in the system?**
- **Is the power supply to the heater okay? 24V plug (R pin 1, 2, and 4) (see page 36).**
- **Is the air intake unobstructed?**
- **Are the fuses in the electrical circuit intact?**
- **Has the overtemperature control been tripped?**
- **Has the desired temperature range been selected correctly using cable B6? (see page 36)**

Before further troubleshooting, note the automatic control of the heater in various sequences. Certain functionality, e.g. pre-ventilation and ignition, only runs in limited periods.

If the heater stops automatically due to errors, the post-ventilation will run for approx. 120 seconds, and the diagnostics lamp will come on (see page 23).

Servicing and repairs may only be performed by qualified personnel. Unauthorised tampering presents a serious safety hazard. The warranty may be void if repairs are attempted by unauthorised persons.

DISCONNECTION OF COMBUSTION CHAMBER

Detach overtemperature control plug, control thermostat, circulation pump, and main plug(s). Detach fuel lines.

Gain access to the combustion chamber by removing tow M8 nuts (pos. 1) The combustion head can now be detached to reveal the combustion pipe (pos. 2).

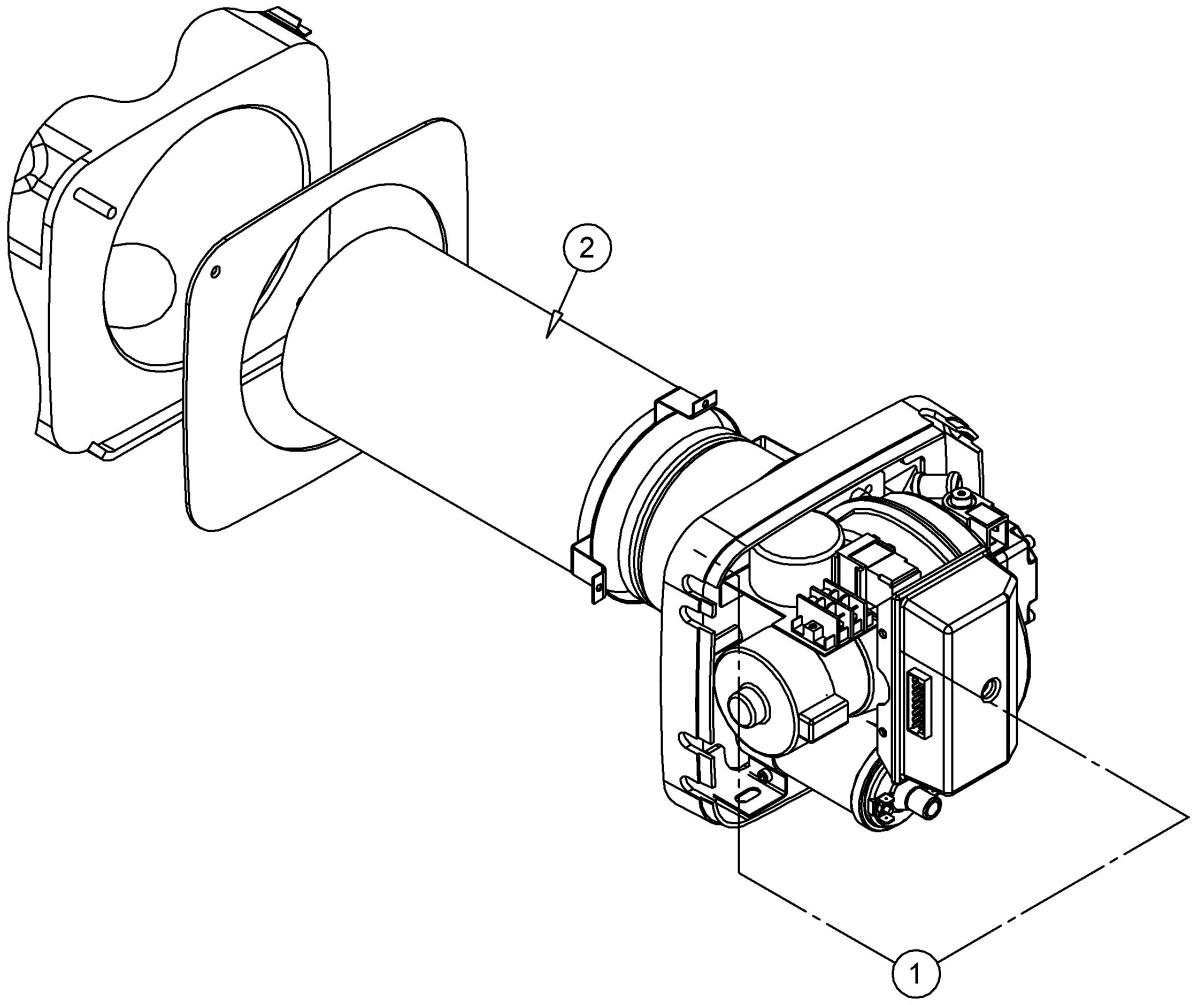

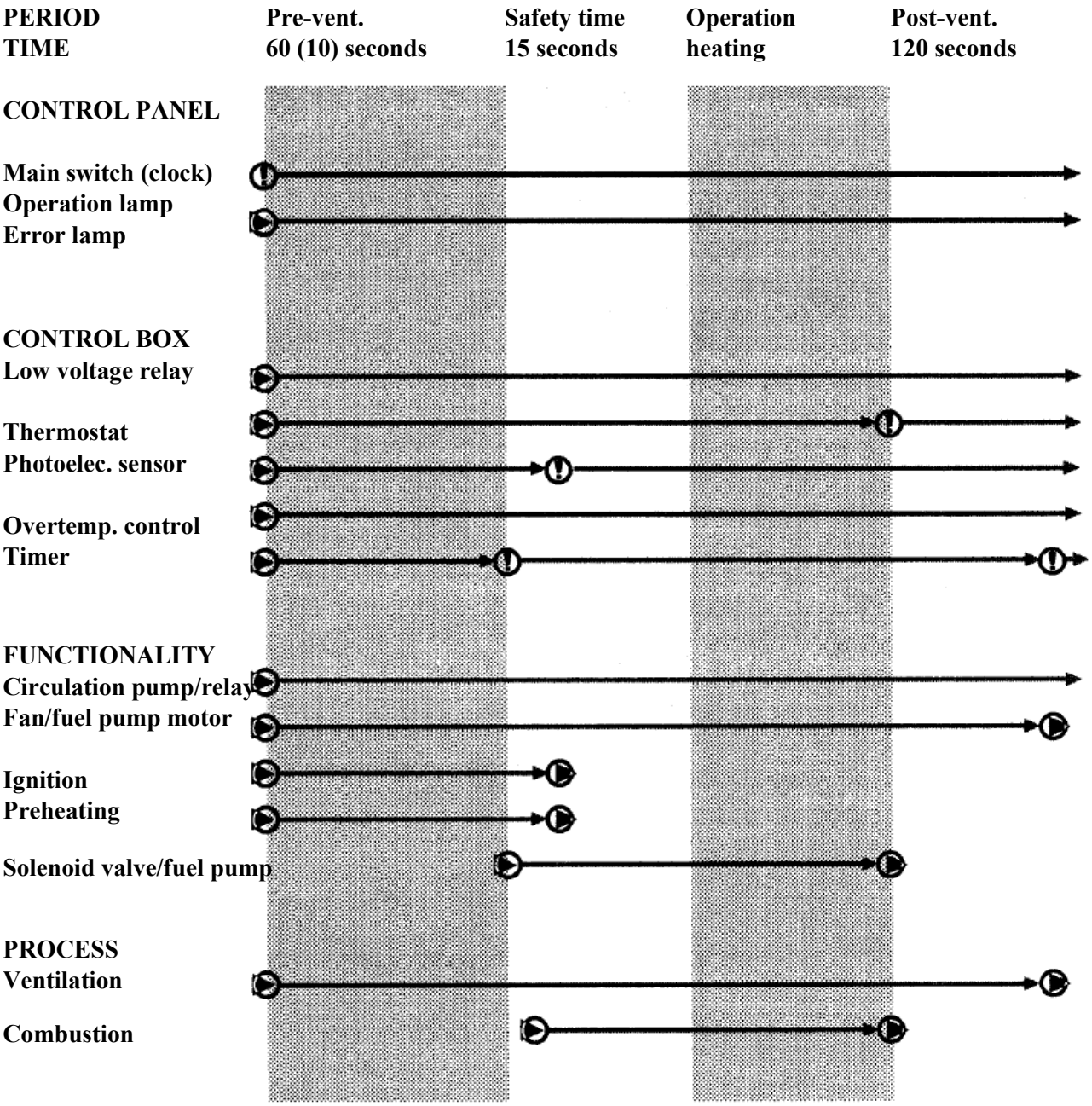

Please note: When cold starting the heater, the pre-ventilation time is 60 seconds. When starting during normal operation, the pre-ventilation time is 10 seconds.

: Signal for activation or deactivation

: Activation

: Deactivation

Please note: THE HEATER MUST NOT BE USED IN GARAGES, SERVICE STATIONS, OR OTHER LOCATIONS WHERE THE USE OF OPEN FIRE IS PROHIBITED!

Type of defect	With LED indicator (seconds) 0 1 2 3 4 5 6 7 8	Display indicator	Remedy
0 Norman operation		0	
1 Safety time exceeded		1	Page 25
2 Ignition electrode defective		2	Page 26
3 Photodetector defective		3	Page 27
4 Undervoltage		4	Page 28
5 Overvoltage	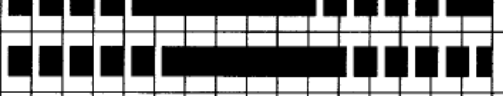	5	Page 28
6 Fan defective	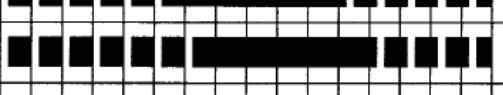	6	Page 29
7 Solenoid valve defective		7	Page 30
8 Sensor defective		8	Page 31
9 Too many start attempts		9	(reset at operation and light)
10(A) Overtemperature alarm		A	Page 31

IMPORTANT !

Heater with LED indicator:

Black areas mean red light.
White areas mean no light.
Dotted areas mean blinking light.

The combustion unit is the heart of the combustion process. It mixes air with fuel vapour, which is ignited by a spark from the coil.

The flame is registered by the photoelectric sensor.

Correct setting of the combustion unit is important to ensure efficient combustion:

- **Please observe the following: Electrode settings, as per page 26.**
- **Proper centring of the nozzle in the turbolator.**

In case of flame failure

Possible reasons:

- **The fuel tank is empty.**
- **The intake line is leaky.**
- **Air collecting in the intake line.**
- **The fuel pump is not drawing fuel.**
- **The fuel pump is not rotating, due to defective coupling.**
- **The fuel pump pressure is low.**
- **The pump solenoid valve is not supplying fuel to the nozzle.**
- **Dirt from the fuel tank is blocking the nozzle.**
- **The fuel is very cold and viscous.**
- **The intake and return fuel lines have been switched around.**
- **No spark due to defective coil/oscillator or ignition cable.**
- **No spark due to short-circuited electrodes or carbon deposits on the ceramic insulator.**

Manual re-activation

If the control system has been deactivated by the safety relay, it can be re-activated by switching off the mainswitch on the dashboard for approx. 5 seconds and then switching it on again. The heater should then start up normally.

VOLTAGE CHECK ON ELECTRODES

Perform when inspection ignition and oscillator. Detach overtemperature control plug, control thermostat sensor, and solenoid valve. When inspecting the ignition, short-circuit the overtemperature control plug to keep the ignition functioning.

For access to the combustion unit, please see the section ”Disconnection of combustion chamber”, page 22.

The discharge by the electrodes can now be inspected as described.

The ignition system receives power for the ignition oscillator and coil from the control system via plug A pin 2 (see page 36).
The ignition oscillator and coil are interconnected and will not function separately.

The ignition oscillator changes the negative operating current into impulses, which are transformed by the ignition coil into high voltage and discharged in the form of a spark between the ignition electrodes.

Discharge failure may be caused by:

1. **A defective ignition cable.**
2. **Electrode settings.**
3. **Dirt on the electrodes.**
4. **Defective ceramic coating on the electrode unit.**
5. **Ignition coil, oscillator, control system.**

Adjust the electrodes using the illustration below.

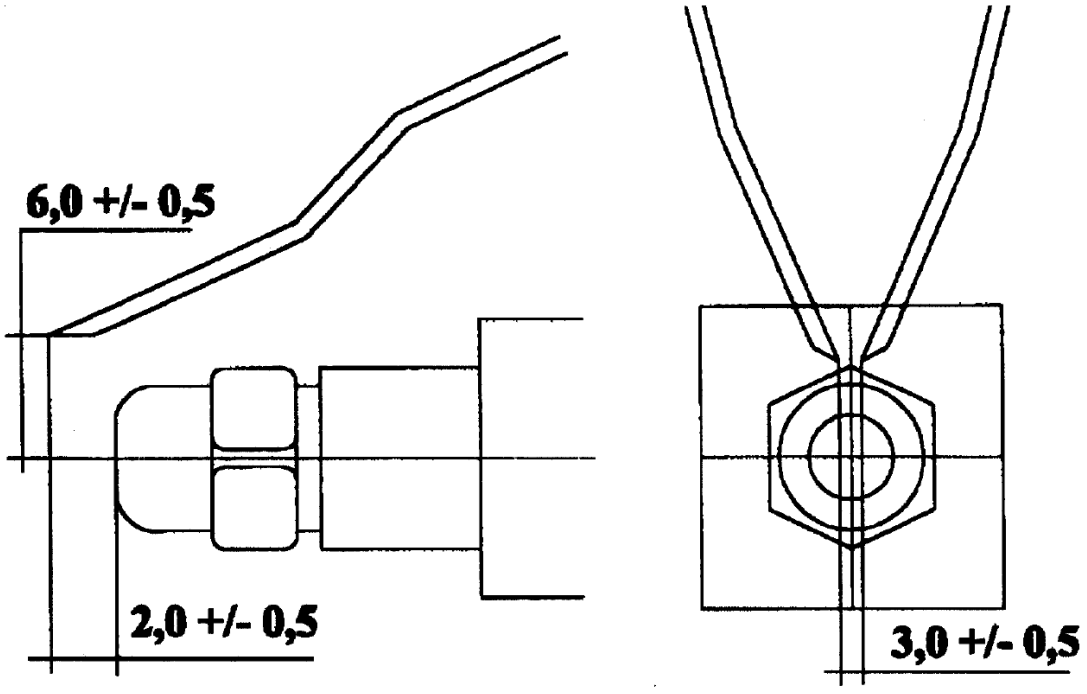

The photoelectric sensor must not be exposed to light during the pre-ventilation; this will cause an error indication.

When the pre-ventilation period ends and the fuel supply begins, the sensor should pick up light. Otherwise the safety relay will shut down the process.

The photoelectric sensor connects to the control system via plug D (see page 36).

Adjustment and remedial action

If the light-sensitive LDR in the photoelectric sensor is shortcircuited or defective, the control system will not allow the heater to start.

If the sensor does not detect enough light while the flame burns, the system will also shut down. This may be caused by dirt on the sensor or incorrect placement in the combustion unit. Troubleshoot the photoelectric sensor using STROCO testing device part no. 35.960. The sensor voltage should be 4.9V when the combustion unit is off. When the heater is operational, the voltage should be 0V.
For 12V system, check the voltage at the photoelectric sensor, plug D. See electrical diagram.

The photoelectric sensor can be disconnected in plug D (see page 36).

Undervoltage

The undervoltage alert is activated if the system voltage drops below 22/11.5V (in step 0) and below 20.5/10.5V during pre-ventilation, operation, and post-ventilation. The alarm can only be reset with the switch off and the voltage above 22/11.5V.

Overvoltage

The alarm is activated if the voltage is above 30/15V and reset below 29.5/14.5V.

Replace the motor by detaching the fan housing from flange no. 1 and then disassembling the housing. Detach the fan wheel and remove the two M4 screws holding the motor in place. When replacing the fan motor, make sure that the bearing can rotate freely, even when the new fan motor is mounted completely.
To maximise airflow, install the fan wheel with the shortest distance possible to the fan housing air intake - approx. 2 mm. This will ensure optimum contact area for the fuel pump coupling.

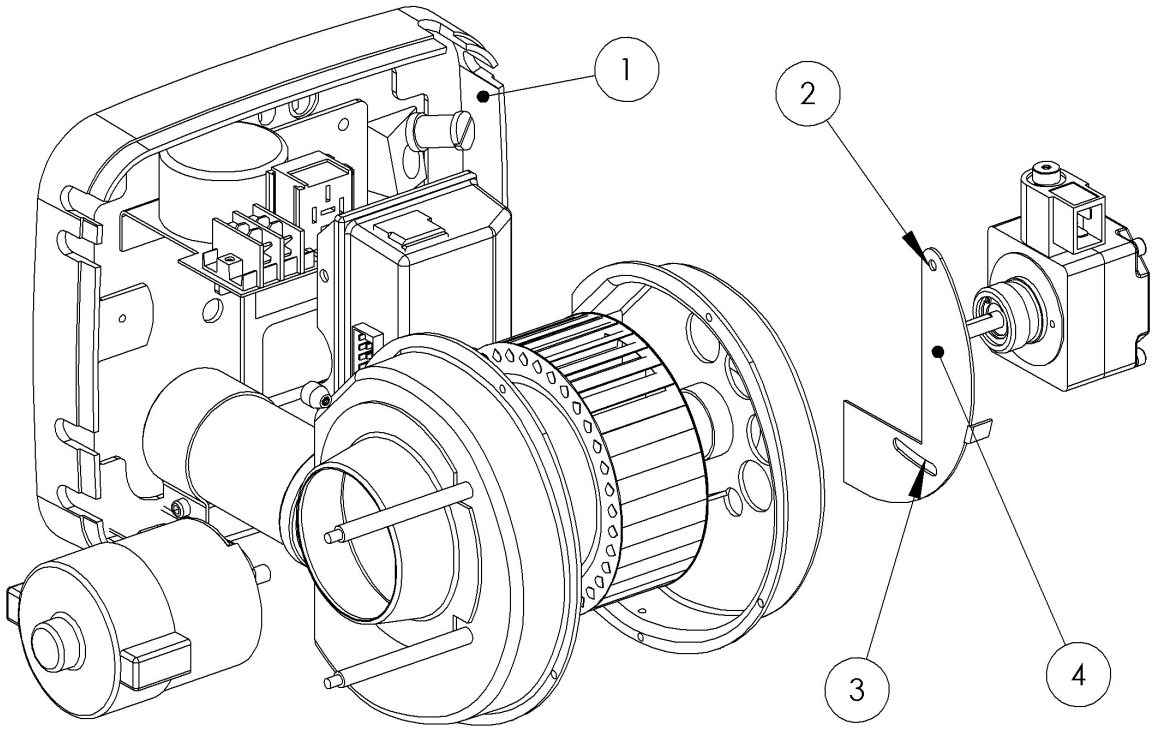

Setting the air volume

Adjust the air volume for combustion by loosening screw no. 2 and 3 and turning air valve no. 4 to + or -.
The air setting affects the fuel combustion. Black smoke = not enough air, blue/grey smoke = too much air.
Check the correct air setting using STROCO soot gauge part no. 13.982 or STROCO flue gas tester part no. 13.983
For combustion data, please see page 14.

Fuel pre-heater

The pre-heater is located in the nozzle holder, which it heats. It is activated upon start-up of the heater unit, but remains inactive during regular operation.
The pre-heater ensures flame establishment when cold starting.
The automatic system controls the pre-heater, which is powered via plug F, approx. 3A for diesel and 6A for RME. (see page 36)

Fuel pump

- **The fuel pump is attached to the fan housing with two 6 mm set screws.**

- **The pump is installed in a two-pipe system with automatic ventilation through the return pipe.**

- **The pump solenoid valve is activated by the control system via plug L (see page 36).**

- **The pump's working pressure value can be found on page 14. Adjust the pressure using screw P1 (see page 17).**

- **The pump is operational while the fan motor is running, but fuel is not supplied to the nozzle for vaporisation until the solenoid valve is activated.**

- **The pump's intake must be absolutely free of leaks and fitted with a fuel filter (see spare parts list for filter types).**

Inspection of fuel pump solenoid valve

The simplest way to check the field coil is using a STROCO test device part no. 35.960. The field coil should draw 0.2A-0.4A power. An audible click from the solenoid valve indicates that the field coil is activated. Field coil and solenoid valve can be checked manually:

Take a reading of the coil voltage before checking the solenoid valve. The voltage should be approx. 24V (12V) in plug L pin 2 (se page 36).

Please note: **The plug has no electrical power until *after the pre-ventilation period*, and the power is *cut off again after approx. 10 seconds*, if the photoresistor does not register combustion. (see the diagram for normal operation, page 23).**

If the voltage is correct in plug L, pin 2 (see page 36), proceed to check the field coil's magnetic force. The core of the coil become magnetised when an electrical current is applied. (E.g. use a screwdriver).

If the photoelectric sensor registers light during pre-ventilation, this is interpreted as a malfunction in the solenoid valve. The error message can only be reset with the switch in the "off" position.

Control thermostat sensor

The control thermostat sensor connects to the control system via plug C (see page 36).
The sensor reads the temperature in the boiler from its position screwed into a socket on the side of the boiler.

The thermostat may be set to two different operational ranges:

1: Cut in/cut-off: approx. 50/70°C
Please note: This temperature range can be selected by connecting cable B6 to chassis earth.
2: Cut in/cut-off: approx. 73/80°C (The normal range).
Please note: This temperature range can be selected by not connecting cable B6 to chassis earth.

The simplest way to check the temperature sensor is using STROCO testing device part no. 35.960. Activate the heater and raise the operating temperature to 22-85°C. The sensor is functional if the test device displays a temperature reading. If the test device display is blinking, the temperature sensor is defective. If in doubt, you can check the sensor manually:

A defective temperature sensor is evident by the heating process continuing beyond the pre-set range, and finally being shut down by the overtemperature control.
Voltage readings on a working temperature sensor should show the following:
A decrease in voltage as the temperature rises. Once the sensor voltage falls to 1.2V, the thermostat should disconnect (for the normal temperature range). An increase in voltage as the temperature falls. At 3.6V, the thermostat should connect (for the normal temperature range).
If the voltage reading is constant and does not follow changes in temperature, the sensor is defective and the thermostat will not function.
Replace the sensor by detaching plug C (see page 36) and unscrewing the sensor from its socket.

Overheating control (max. temp.)

This device ensures that the water in the boiler is not heated beyond 110°C. The overtemperature control is screwed into a socket on the side of the boiler next to the temperature sensor. If the control cuts out in case of overtemperature, the error lamp will come on.
The device cannot be re-activated by attempting to re-start via the main switch; this must be done manually by depressing the overtemperature device's black button. Re-activation will not take place until the boiler temperature has dropped.

It is a good idea to investigate the reason for the cut-out before and after re-activation.

1 Is there water in the system?

2 Is there sufficient circulation?

3 Has the system been bled properly for air?

4 Is the thermostat functioning properly?

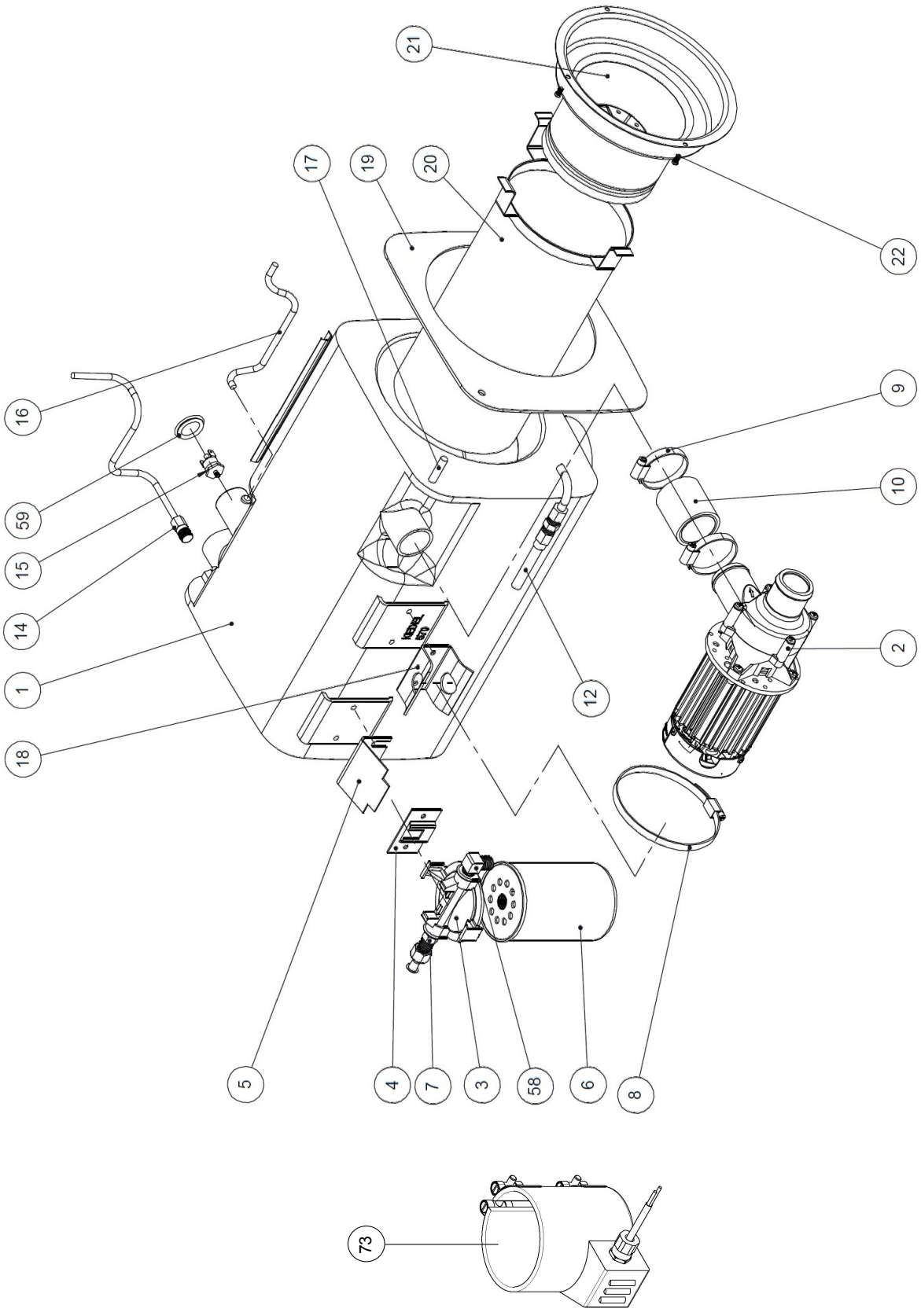
21
17
19
20
22
16
9
59
10
15
14
2
1
12
18
5
4
7
3
58
6
8
73

Pos.	Description	Part number	
		Diesel	RME
1	Boiler	35.541	35.541
2	Circulation pump Highflow 24V	35.470	35.470
3+4	Installation kit	11.039	11.039
3+4+6	Fuel filter cpl.	11.038	11.038-1
5	Bracket for fuel filter	35.015	35.015
6	Fuel filter cartridge	11.037	11.037-1
7	Nipple 1/4 x 1/4 thread	30.395	30.395
8	Clip 71-95	35.581	35.581
9	Clip 32-44	35.021	35.021
10	Rubber hose	35.022	35.022
12	Fuel hose 300 mm	35.179	35.179
14	Temperature sensor	35.010	35.010
15	Overtemperature control	35.030	35.030
16	Cable for overtemperature control	35.031	35.031
17	Support bolt 8 mm	35.023	35.023
18	Bracket for circulation pump 35470	35.459	35.459
19	Gasket ring	35.028	35.028
20	Combustion pipe	35.042	35.042
21	Combustion unit	35.041	35.041
22	Screw 4 mm	35.024	35.024
58	Angle 1/4 x 1/4”RG / Nipple 1/4”RG + 14 x 1.50 mm	30.390/35.019	30.390/35.019
59	Plug for overtemp.	35.013	35.013
73	Filter pre-heater (optional)	11.046	11.046

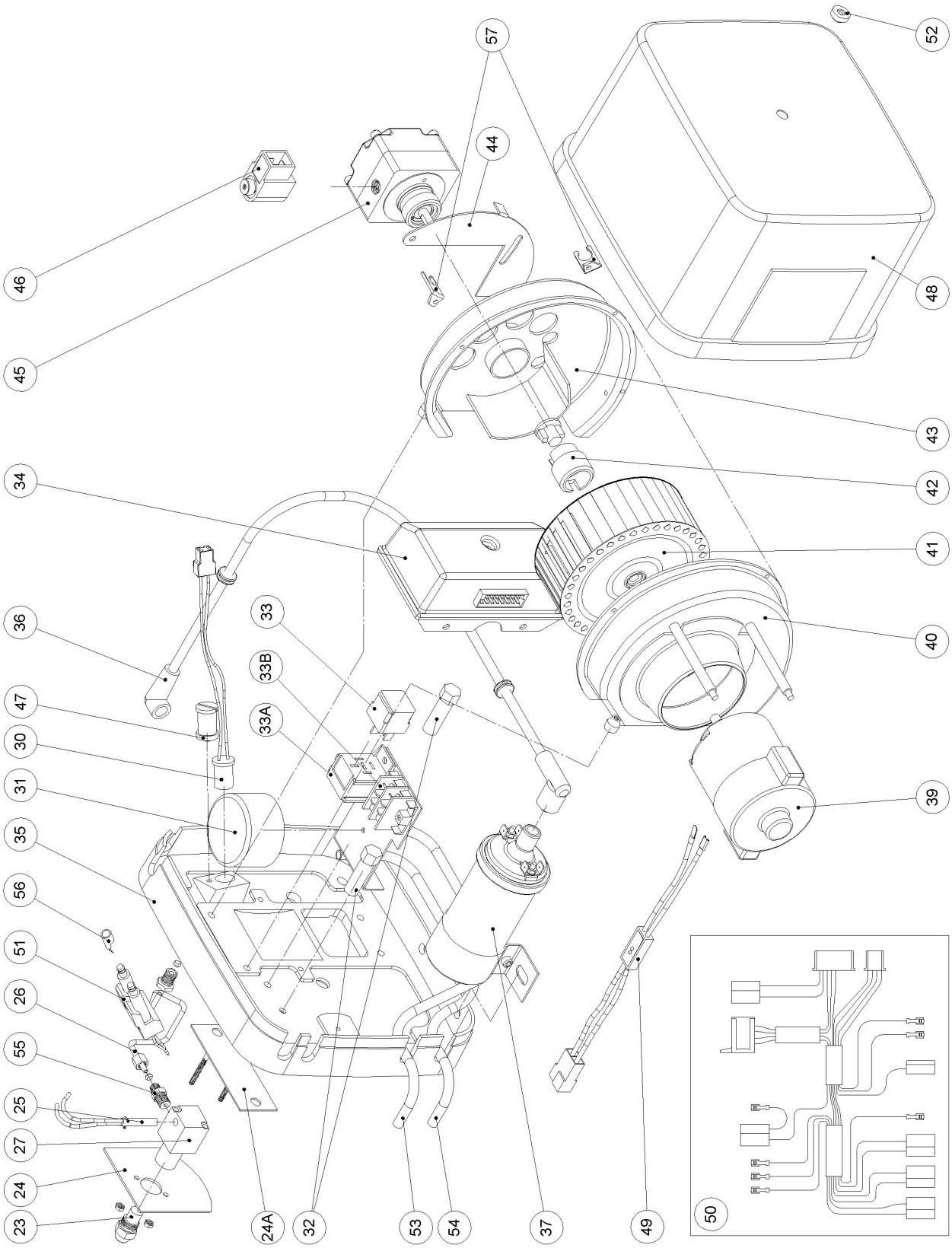
57
52
44
46
48
45
43
42
34
41
36
33
40
33B
47
33A
30
31
39
35
56
51
26
55
25
27
24
23
24A
32
53
54
37
49
50

Pos.	Description	Part number	
		Diesel	RME
23	Nozzle for 23kW	35.073	
23	Nozzle for 30kW	35.072	35.072
24	Air plate	35.080	35.082
24A	Plate for nozzle socket	35.123	35.123
25	Pre-heater element	31.142	31.143
26	Oil pressure pipe cpl.	35.250	35.250
27	Nozzle socket	30.130	30.130
30	Photoelectric sensor	31.160	31.160
31	Ignition oscillator	35.510-1	35.510-1
32	8 mm nut	35.026	35.026
33	Relay for circulation pump	31.190	31.190
33A	Bracket for relay holder and chassis connection clamp	35.033	35.033
33B	Chassis connection clamp	31.380	31.380
34	Control system 24V	35.526	35.526
35	Flange	35.036	35.036
36+57	Ignition cable	35.170-1	35.170-1
37	Ignition coil 12V (24V heater)	30.490	30.490
39	Fan motor 24/12V	35.340-1/35.342-1	35.340-1/35.342-1
40	Fan housing, motor section	35.037	35.037
41	Fan wheel	35.270	35.270
42	Coupling cpl.	35.360	35.360
43	Fan housing, intake	35.032	35.032
44	Air valve	35.300	35.300
45+46	Fuel pump cpl.	31.372	31.372
46	Solenoid valve 24/12V	31.376/31.373	31.376/31.373
47	Plastic nut for photoelectric sensor	35.140	35.140
48	Plastic cover for 30kW	35.034-1	35.034-1
48	Plastic cover with air vent	35045	35045
49	Fuse for fan motor	35.575	35.575
50	Wiring harness cpl.	35.570-1	35.570-1
51	Electrode block	35.101	35.101
52	Nut	35.035	35.035
53	Fuel line return	35.018	35.018
54	Fuel line supply	35.016	35.016
55	Nipple 4 x 1/8 straight	35.127	35.127
56	Rahjan coupling	35.188	35.188

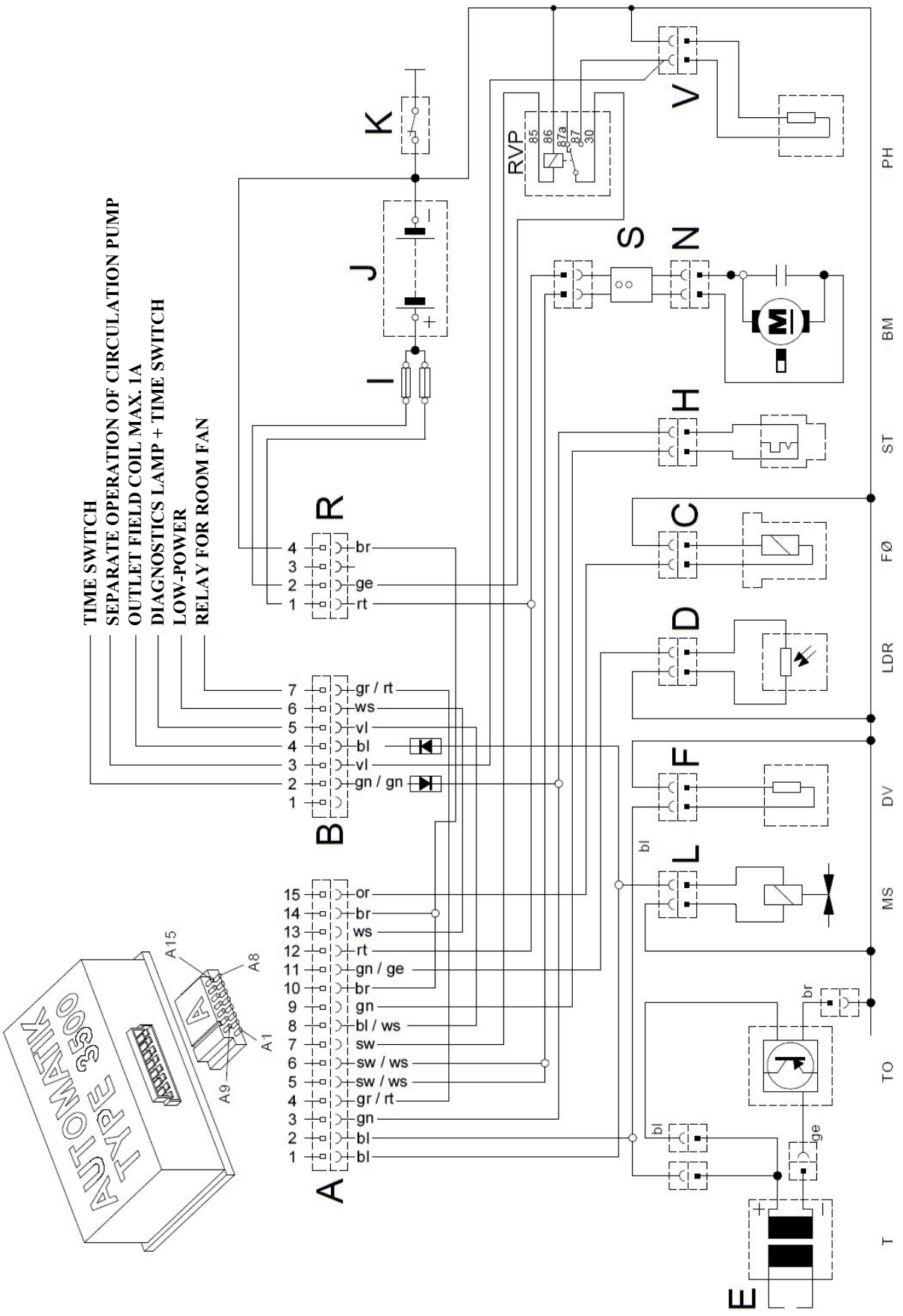
TIME SWITCH
SEPARATE OPERATION OF CIRCULATION PUMP
OUTLET FIELD COIL MAX. 1A
DIAGNOSTICS LAMP + TIME SWITCH
LOW-POWER
RELAY FOR ROOM FAN
K
J
I
RVP
85
86
87a
87
30
V
S
N
H
R
4 br
3
2 ge
1 rt
B
7 gr / rt
6 ws
5 vl
4 bl
3 vl
2 gn / gn
1
C
D
F
L
bl
A
15 or
14 br
13 ws
12 rt
11 gn / ge
10 br
9 gn
8 bl / ws
7 sw
6 sw / ws
5 sw / ws
4 gr / rt
3 gn
2 bl
1 bl
A15
A8
A1
A9
AUTOMATIK
TYPE S300
br
ge
E
+
-
PH
BM
ST
FØ
LDR
DV
MS
TO
T

Keys to abbreviations

A	Control system plug
B	Main plug signal cables
BM	Fan motor
C	Control thermostat plug
D	Photoelectric sensor plug
E	Ignition electrodes
F	Nozzle pre-heater plug
H	Overtemperature control plug
L	Field coil plug
LDR	Photoelectric sensor
ST	Overtemperature control
N	Fan motor plug
R	Main plug power supply
FØ	Control thermostat sensor
RVP	Circulation pump relay
T	Ignition coil
TO	Ignition oscillator
V	Connector for filter pre-heater
PH	Filter pre-heater
DV	Nozzle pre-heater
MS	Field coil
I	Fuse
J	Accumulator
K	Main switch

Color codes

bl	blue
br	brown
ge	yellow
gn	green
gr	grey
or	orange
rt	red
sw	black
ws	white
vl	violet

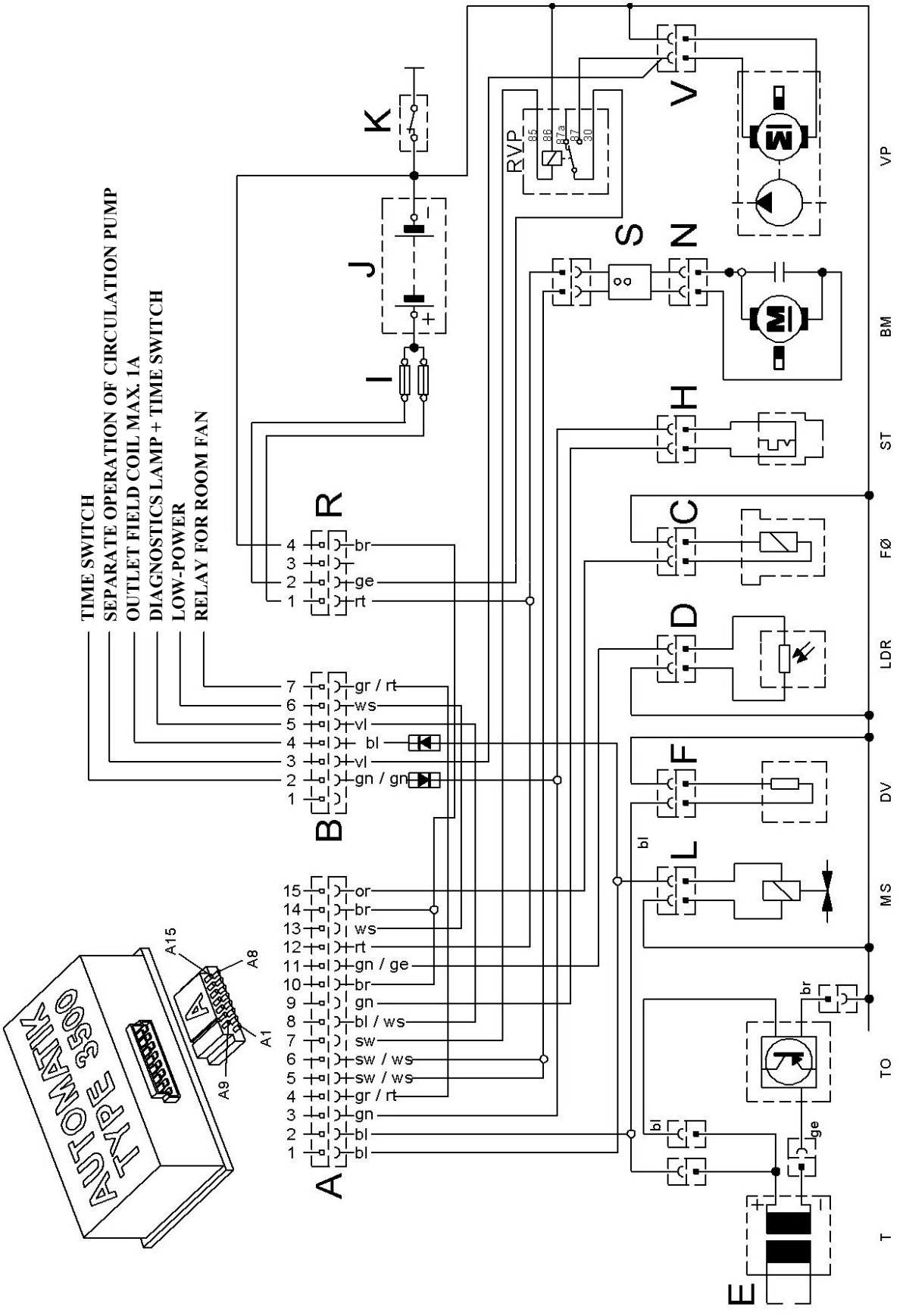
TIME SWITCH
SEPARATE OPERATION OF CIRCULATION PUMP
OUTLET FIELD COIL MAX. 1A
DIAGNOSTICS LAMP + TIME SWITCH
LOW-POWER
RELAY FOR ROOM FAN
AUTOMATIK
TYPE 3500
A15
A8
A1
A9
A
B
R
K
J
I
RVP
V
S
N
H
C
D
F
L
E
VP
BM
ST
FØ
LDR
DV
MS
TO
T
br
ge
bl
gr / rt
ws
vl
gn / gn
or
gn / ge
gn
bl / ws
sw
sw / ws

Keys to abbreviations

A	Control system plug
B	Main plug signal cables
BM	Fan motor
C	Control thermostat plug
D	Photoelectric sensor plug
E	Ignition electrodes
F	Nozzle pre-heater plug
H	Overtemperature control plug
L	Field coil plug
LDR	Photoelectric sensor
ST	Overtemperature control
N	Fan motor plug
R	Main plug power supply
FØ	Control thermostat sensor
RVP	Circulation pump relay
T	Ignition coil
TO	Ignition oscillator
V	Circulation pump plug
VP	Circulation pump
DV	Nozzle pre-heater
MS	Field coil
I	Fuse
J	Accumulator
K	Main switch

Color codes

bl	blue
br	brown
ge	yellow
gn	green
gr	grey
or	orange
rt	red
sw	black
ws	white
vl	violet

LABELS STROCO 35.02 M EL

The heater is labelled with a model plate and warning label, as shown below.

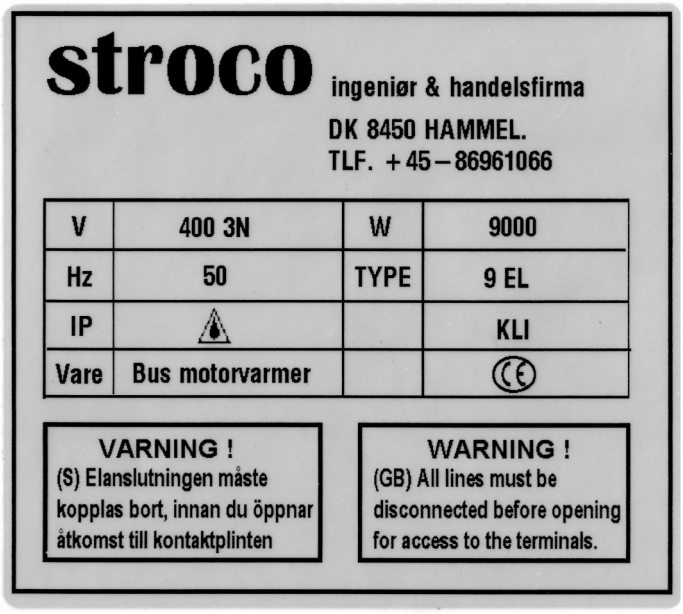

Description

The Stroco 35.02 M EL is an electrical heater designed primarily for heating vehicles in unheated garages or in places where fuel-burning heaters cannot be used. STROCO 35.02 M EL is fitted to the vehicle's existing heating system and can therefore heat both the vehicle's engine and cabin. STROCO 35.02 M EL has integrated heating elements, control thermostat, and safety thermostat. The model designations 6 kW and 9 kW describe the heating output in kW. The heater is connected to the mains supply via a EURO socket fitted to the vehicle. To provide water circulation, a circulation pump should be installed with electrical connection from the heater. The direction of the water circulation should follow the existing flow. An arrow on the circulation pump indicates the pump flow direction.

STROCO 35.02 M EL should be fitted so that the cover on the electrical unit may be removed.

Technical specifications

Type:	**STROCO 35.02 M EL type 6 kW and 9 kW**
Heating output:	**6 or 9 kW**
Electrical connection:	**3 x 400 V via 5 pin EURO plug (incl. neutral and earth).**
Control thermostat:	**adjustable 5-85°C**
Safety thermostat:	**110°C, push-button reset**
Circulation pump:	**Overall length 130 mm:** **Electrical connection 1 x 230 V** **Output 30-80 W, three step adjustable** **Capacity 38 l/min at 2 m/vs** **The pump must be fitted with the axle in horizontal position**

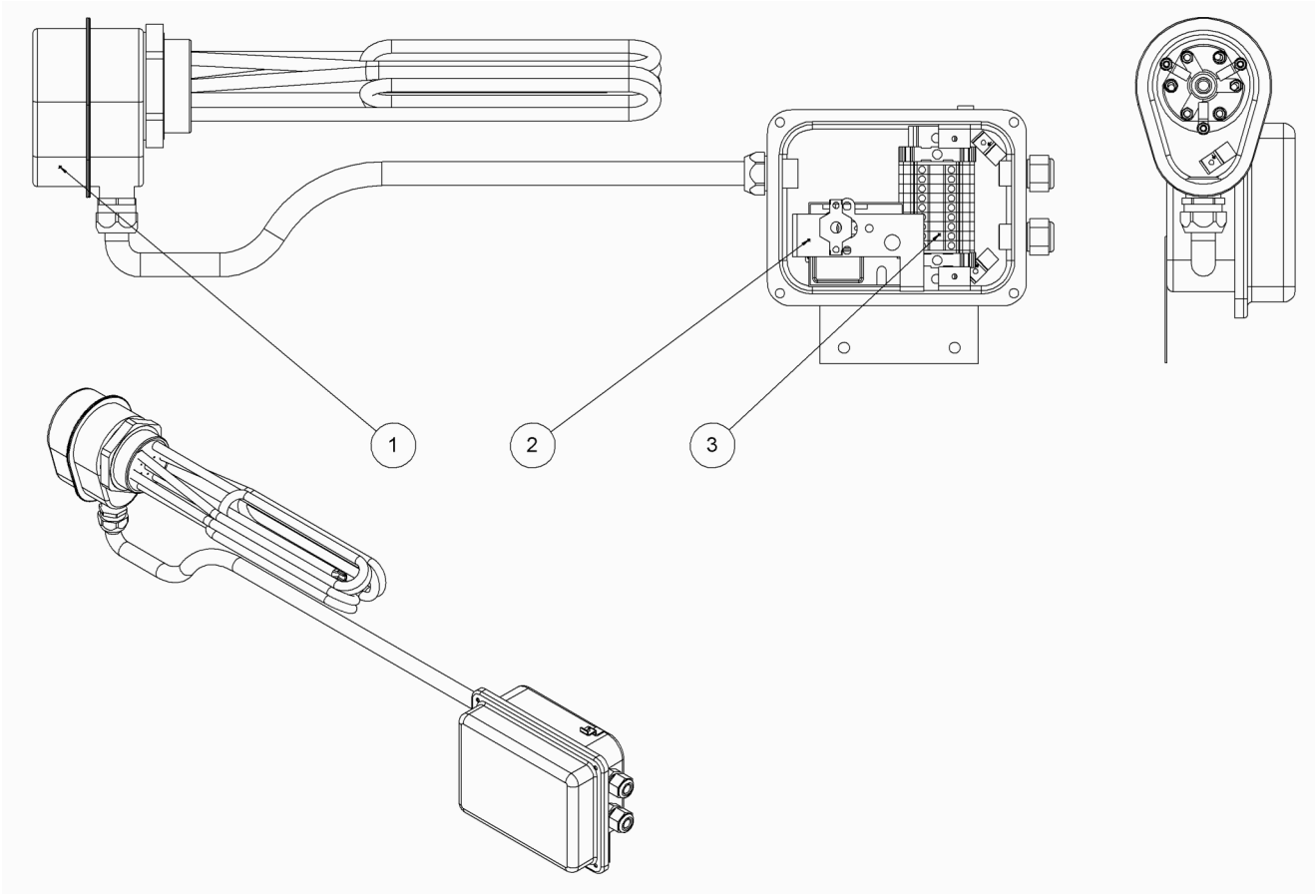

Pos.	Description	Part no.
1	Electrical immersion heater 9kW w/ ext. coupl. housing 750 mm	11.925
2	Thermostat EGO 30-85°C/110	11.926
3	Tag block 8 pin 4q wago	11.913
4	Circulation pump	11.812-1

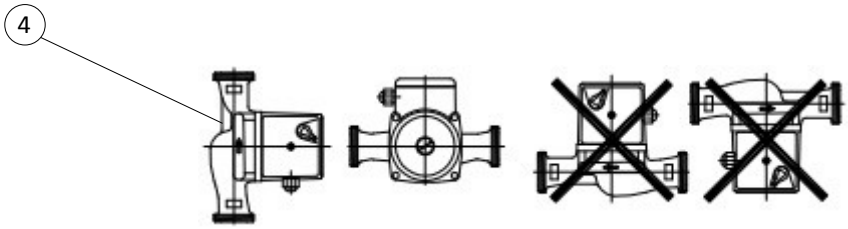

The circulation pump must always be installed with horizontal motor shaft. no other installation is allowed!

The following is a description of the electrical installation. Please refer to the diagram on the nextpage.

1. Internal wiring

The wiring between the three parts of the system: heater, pump, and EURO plug must be established using at least 1 mm² regular plastic sheath cable HO7 N-F. Cables can be inserted In the heater tag block by pressing down with a small screwdriver at L. The wiring must be protected by flexible 3/8" armoured hose with metal inserts (e.g. STROCO no. UDG 11.865). The armoured hose must have PG11 threaded joints at the ends with clamping ring fittings to relieve the weight on the hose (e.g. STROCO no. UDG 11.867). Where the hose may be subject to vibrations it must be further secured with cable clips. Check that the thermostat is set to the desired temperature. NOTE! Turn up the thermostat and press the overheat button before start-up.

2. EURO sockets

Connect to the mains grid only with a permanently fitted 5 pin EURO socket (E.g. STROCO no. UDG 11.861). The socket should be fitted to the vehicle in a location that is sheltered from water and dirt. The opening should be down-facing to allow condensation water to escape. All plugs should be greased liberally with acid-free grease. The accompanying label reading "Only to be used with an earthed socket" must be placed clearly visibly on or next to the socket.

3. Chassis earth connections

Earth connections may only be established as shown in the diagram on the following page. Earth connections between individual parts must always be enclosed in the armoured hoses. The earth connections from H to K, leading to the vehicle chassis, must be established using 4 mm² wire. Clear off paint and rust thoroughly at the vehicle chassis point. Use at least a Ø3.5 mm self-tapping or threading screw with a toothed washer. Do not remove chassis earth connection G to the cover of the heater.

4. Thermostats

The control thermostat D may be adjusted continuously from 5°C to 85°C. The thermostat has an integrated 12 K hysteresis, meaning that there are 12°C between activation and deactivation. The operating temperature can be set using a screwdriver at D. The safety thermostat E is triggered if the temperature exceeds 110°C. The thermostat can be re-activated by pressing the button E.

Please note: Remove mains plugs before setting or re-activating thermostats.

5. Circulation pump

The circulation pump C has 3 speed settings, 1, 2, and 3, which can be selected using the button F. If the return line to the heat exchanger feel hot to the touch, select a slower speed.

A Heat exchanger
B Circulation pump
C EURO socket
D Control thermostat
E Safety thermostat
F Circulation pump adjustment
G Earth connection to cover
H Outer earth connection
K Earth connection to chassis
L Tag block
M Heating elements
N Capillary tube sensors

bl blue
ge yellow
gn green
sw black

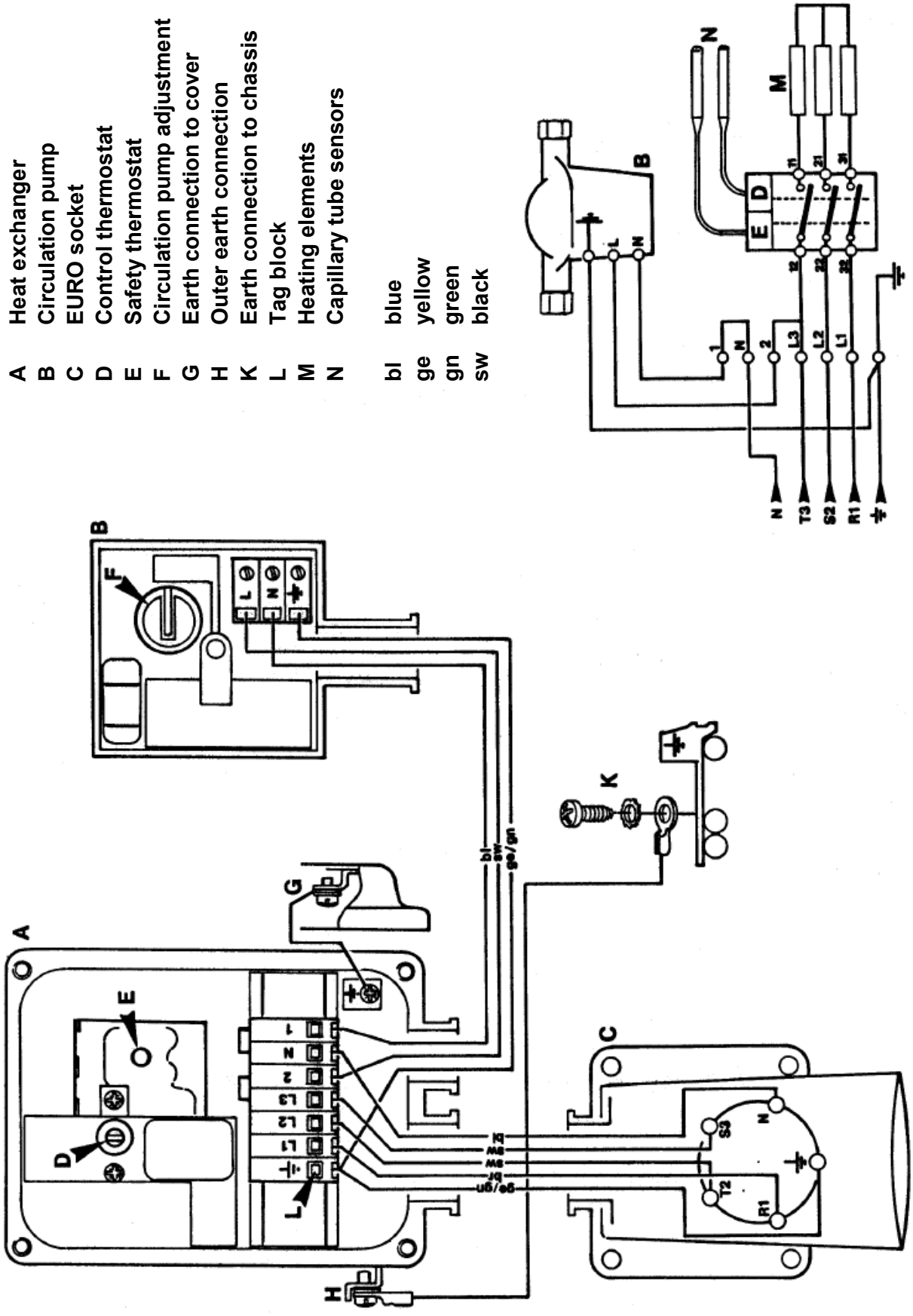

Warranty conditions for STROCO fuel-burning heaters

A full service history with the heater's number must be available to STROCO in order to settle warranty claims. The warranty may be void if the warranty card has not been properly filled in and returned to STROCO.

STROCO fuel-burning heaters and parts are covered by a 12 month warranty from time of installation (maximum 2 years from date of delivery).

The warranty covers manufacturing and/or material defects.

The warranty may be void if the unit is altered, or if the unit is not installed in accordance with our instructions.

During the warranty period, STROCO is obligated to repair units or parts that we determine to be defective. Repairs may also be performed at our service shops.

Nozzles and wear parts are not covered by the warranty.

Labour costs in connection with disassembly and installation of defective parts are not covered

If you observe defects in the system during the warranty period, the defective parts should be sent postage paid to STROCO with information about the defect and delivery date/heater no.

STROCO's assessment of the defect, and whether it is covered by the warranty, will always be final and binding for the customer.

STROCO will only accept warranty claims that have been approved beforehand. STROCO can only accept warranty claims if the owner/user can present written documentation to show that all service and safety instructions have been followed. All warranties will be void if the installation guide and other instructions in this manual have not been followed. The same applies if installation and maintenance has not been performed in a proper professional manner, or if unoriginal parts have been used for servicing or repairs.

Consequential losses

STROCO assumes no liability for personal injury, damage to property, or operating losses resulting from failure of the unit, no matter the cause (including manufacturing defects).

stroco
MOBILE HEATING SOLUTIONS

DANMARK, Denmark:
STROCO ApS
Viborgvej 50, Voldby
DK-8450 Hammel
Tlf. +45 86 96 10 66
Fax +45 86 96 96 47

ENGLAND:
GRAYSON THERMAL SYSTEMS
257 Wharfdale Road
Tyseley
GB-Birmingham B11 2DP
Tlf. 0121 708 4000
Fax 0121 706 1886

FINLAND:
EL-CAR OY
Jukka Eerola
Mittatie 26A
SF-01260 Vantaa
Tlf. 09 389 4995
Fax 09 389 4807

MUICON OY
Marko Muikko
Hakekatu 4
SF-70800 Kuopio
Tlf. 844 2134 131

FÆRØERNE, the Faroe Islands:
CARE ON SEA Spf
Úti vio Neyst 11
FO-430 Hvalvik
Tlf. 74 88 55

NORGE, Norway:
VEST SERVICE AS
Visnesvegen 9A
N-6783 Stryn
Tlf. 90 85 60 00

POLEN, Poland:
MULTITECH sp. z o.o.
Dabrowa Szlachecka 238
PL-32-070 Czernichóv
Tlf. 12 638 06 63
Fax 12 638 06 63

PORTUGAL:
PROJECTIVA
Zona Industrial
Apartado 175
P-2354-909 Torres Novas
Tlf. 249 819 240
Fax 249 819 249

SCHWEIZ, Switzerland:
AUTOKÜHLER AG
Wiesackerstrasse
CH-8105 Regensdorf
Tlf. 44 840 65 00
Fax 44 840 60 80

SVERIGE, Sweden:
TK BUSSKLIMAT AB
Järnringen 2
S-433 30 Partille
Tlf. 31 44 52 00
Fax 31 44 52 65

ØSTRIG, Austria:
FA. ING. HUBERT KNITTEL
Lastbergstrasse 41
A-3031 Pressbaum
Tlf. 1 804 15 23 00
Fax 1 804 15 23 48